BANK AIRCONDITIONER
MANUAL

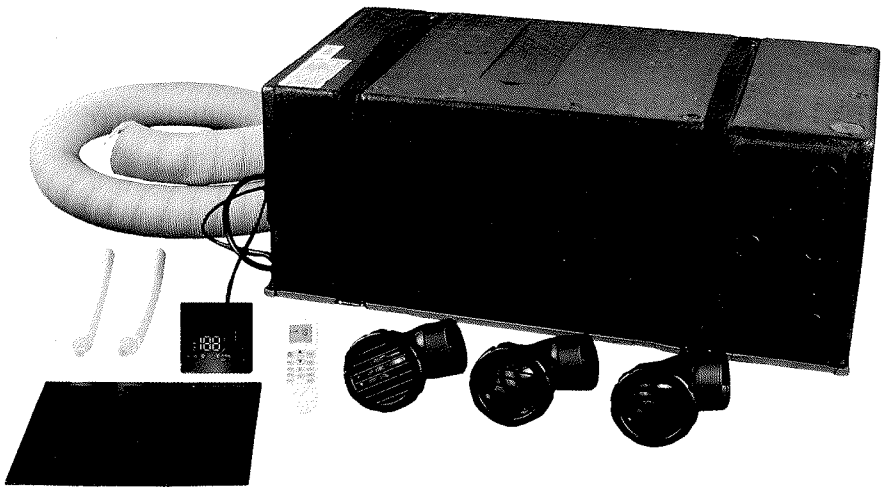

MODEL: 0115240
OCS-RECREATIE BV, HENGELO NL

Please read this information carefully before use and keep it for future reference.
This device is suitable for use in caravans and mobile homes

INDEX

1.1 Safety warning.

1.2 Article description and parts list.

1.3 User tips.

1.4 Description of the controls.

1.5 Installing and changing the remote control batteries.

1.6 Description of the wall pad display.

1.7 Technical data.

1.8 Routine maintenance.

2.1 (Un-)packing, content.

2.2 Choice of place of installation.

2.3 Fixing systems of the device.

2.4 Fixing of the display.

2.5 Compartment opening and electrical connection.

2.6 Air duction.

2.7 Troubleshooting and maintenance.

2.8 Wiring diagram.

2.9 Spare parts list.

1.1 SAFETY WARNING

1.Do not (dis)assemble or modify the device yourself.
2.The installation uses fuses of 3.15A / 250V.
3.This appliance can be used by children aged from 10 years and above and persons with reduced physical, sensory or mental capabilities or lack of experience and knowledge if they have been given supervision or instruction concerning use of the appliance in a safe way and understand potential hazards. Children must not play with the appliance. Cleaning and user maintenance shall not be made by children.
4.Do not use the appliance if the cord, cable or plug is damaged or if the appliance has been dropped or damaged in any way. The device should then be returned to the importer or manufacturer for a comprehensive examination, repair or adjustment.
5.Switch off the appliance before cleaning and for normal maintenance.
6.Connect the appliance to a 220V mains socket with earthing. The contact must not show any defects or damage and must be earthed. The appliance must be installed in accordance with the wiring regulations. Unplug the power cord if you notice any strange noises or smells.
7.Do not insert objects such as sticks or fingers into the openings.

1.2 ARTICLE DESCRIPTION AND PARTS LIST

This air conditioner is designed and built to be installed in vehicles such as motorhomes and caravans to optimize the indoor temperature. In hot weather, the device supplies cool and dehumidified air; in cold weather, warm air is supplied. The temperature is adjustable in both applications.The type number and batch code are printed on the outside of the device.
Parts list:

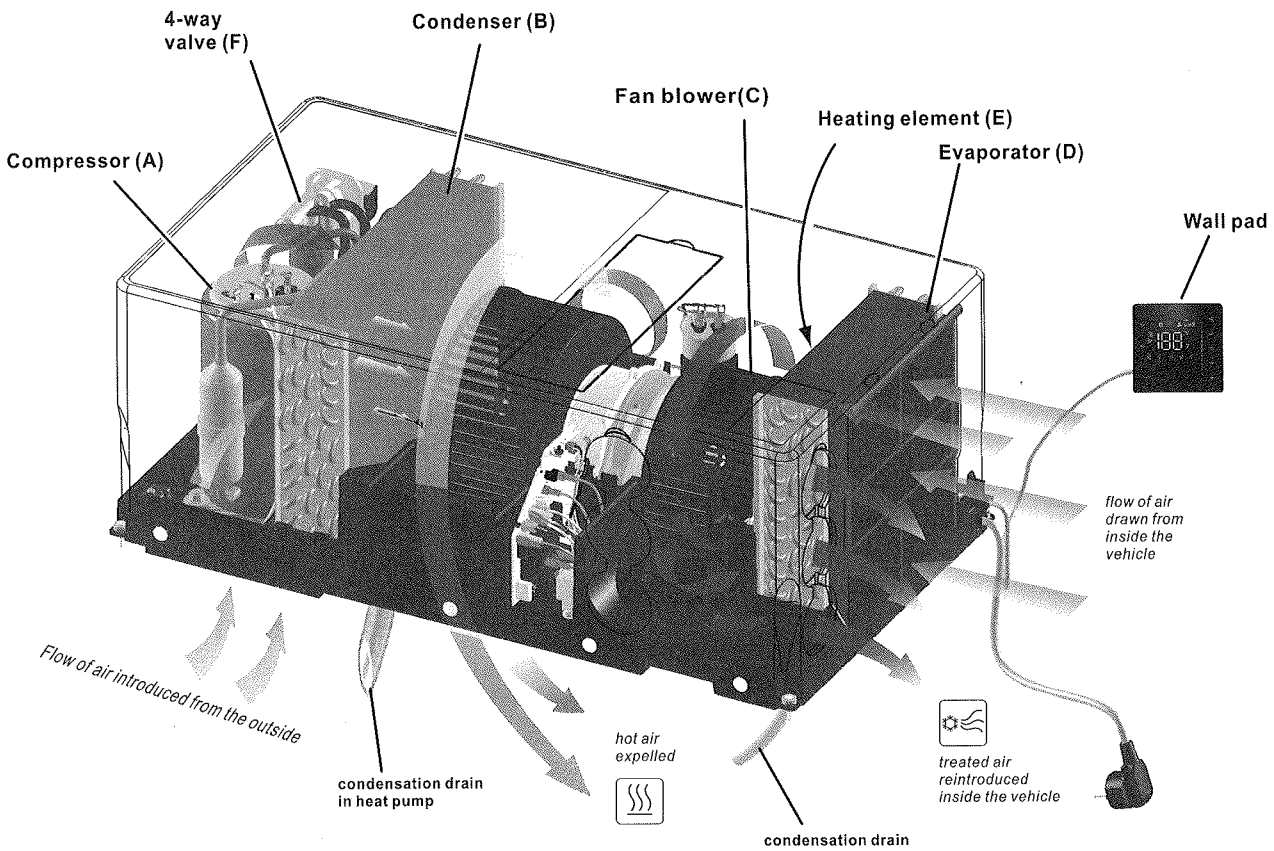

1.3 USER TIPS

The machine performance can be improved by taking some precautions.

* Improve the vehicle's heat insulation by eliminating openings and covering the glass surface with reflecting curtains.
* Avoid frequently opening of doors and windows when not necessary.
* Select the appropriate temperature and fan speed. Direct the air vents suitably.
* In order to avoid machine malfunctioning and risks of injury, take the following precautions. Do not obstruct the ventilation air inlet and outlet with cloth, paper or any other item. Do not put hands or any other items into the openings. Do not spray water inside the machine. Keep flammable substances at all items well away from the machine.
* Clean the air filter periodically.

1.4 DESCRIPTION OF THE CONTROLS

At the time of switching on, the system waits for a few minutes before operation of the compresso Press the MODE button to move between the possible states (automatic, cold, dehumidification, ventilation, heat pump) and wait two seconds on the selected state for this to be confirmed with and audible warning. The buzzer is inside the bankairco. Always point the remote control towards the wall pad to send all the signals.

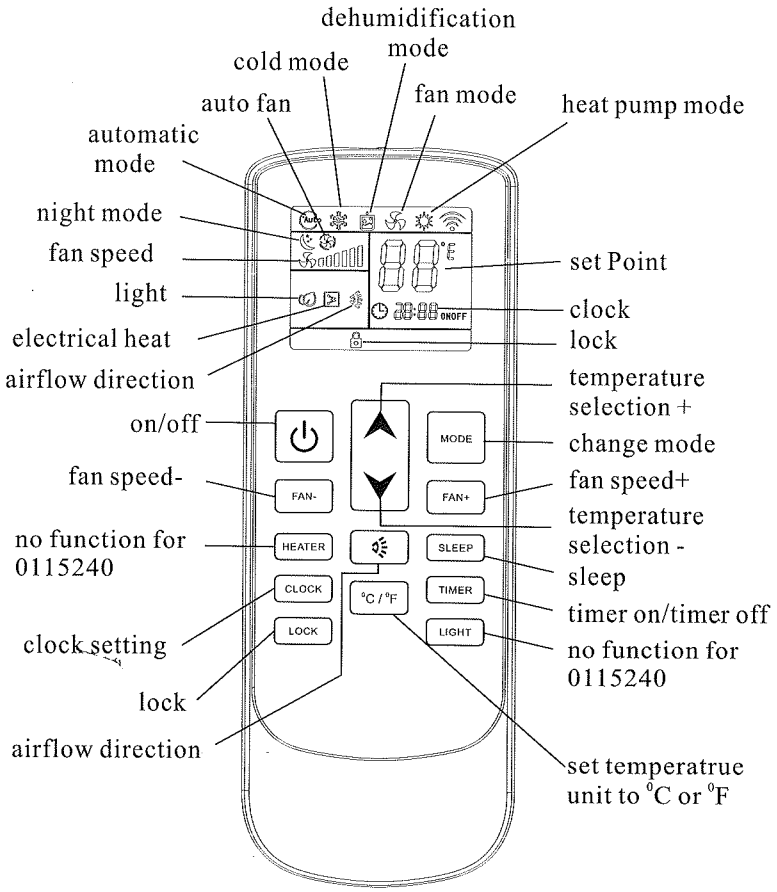

1.4.1 Automatic mode

1. Press the On/Off button to switch on the device.
2. Press the Change Mode button and select the option for 'automatic'. [1]
3. The temperature selection keys are disabled.
4. Press the button for Fan Speed and select one of the options low/medium/high/automatic. [2]
5. Press the On/Off button to turn off the device. The selected mode remains in memory.

[1] In this mode the machine manages the compressor, heat pump and fan speed entirely automatically by comparing the set temperature with the internal temperature according to table A.

Table A:

Internal temperature	$T \leq 20°C$	$20°C < T < 25°C$	$T \geq 25°C$
Operating mode	Heat pump ventilation	Dehumidification ventilation	Cold
Set point	20°C	22°C	25°C

1.4.2 Cold mode

1. Press the On/Off button to switch on the device.
2. Press the Change Mode button and select the option for 'cold'.
3. Press the selection buttons to set the ambient temperature on the desired value between 18°C and 30°C.
4. Press the button for Fan Speed and select one of the options low/medium/high/automatic. [2]
5. Press the On/Off button to turn off the device. The selected mode remains in memory.

1.4.3 Dehumidification mode

1. Press the On/Off button to switch on the device.
2. Press the Change Mode button and select the option for 'dehumidification'.
3. Press the selection buttons to set the ambient temperature on the desired value between 18°C and 30°C.
4. The fan speed selection button is disabled.
5. Press the On/Off button to turn off the device. The selected mode remains in memory.

1.4.4 Ventilation mode

1. Press the On/Off button to switch on the device.
2. Press the Change Mode button and select the option for 'ventilation'.
3. Press the selection buttons to set the ambient temperature on the desired value between 18°C and 30°C.
4. Press the button for Fan Speed and select one of the options low/medium/high/automatic. [2]
5. Press the On/Off button to turn off the device. The selected mode remains in memory.

1.4.5 Heat pump mode

1. Press the On/Off button to switch on the device.
2. Press the Change Mode button and select the option for 'heat pump'.
3. Press the selection buttons to set the ambient temperature on the desired value between 18°C and 30°C.
4. Press the button for Fan Speed and select one of the options low/medium/high/automatic. [2]
5. Press the On/Off button to turn off the device. The selected mode remains in memory.

1.4.6 Night mode

1. Press the On/Off button to switch on the device.
2. Press the Change Mode button to select the desired mode from all the ones available.
3. Press the Night Mode button to turn this function on and off.
4. Press the selection buttons to set the ambient temperature on the desired value between 18°C and 30°C.
5. This mode sets the ventilation on low speed. Therefore it is not possible to switch onto the othe available options.
6. Press the On/Off button to turn off the device. The selected mode remains in memory.

1.4.7 Timer Off mode

1. Press the On/Off button to switch on the device.
2. Press the Change Mode button to select the desired mode from all the ones available.
3. Press the selection buttons to set the ambient temperature on the desired value between 18°C and 30°C.
4. Press the button for Fan Speed and select one of the options low/medium/high/automatic. [2]
5. Press the Timer Off button to set the time when the device must switch off. [3]
6. Press the selection buttons Up and Down to change the time when the device must switch off.
7. Press the Timer Off button to confirm the data entered.
8. Pressing the Timer Off button a third time will disable this function.

1.4.8 Timer On mode

1. The device must be off.
2. Press the Timer On button to set the time when the device must switch on. [4]
3. Press the selection buttons to change the time when the device must switch on.
4. Press the Timer On button to confirm the data entered.
5. Pressing the Timer Off button a third time will disable this function.

At the set time the machine will start in automatic mode.

[2] On automatic speed the correct ventilation is set according to the difference in temperature between the set point and the ambient temperature.

[3] When you press the button the first time, the symbol on the display flashes to signal you are programming a switch-off. Pressing it a second time saves the data and the icon stays on steady to signal activation of the Timer Off function. Pressing it a third time turns off the Timer Off mode.

[4] When you press the button the first time, the symbol on the display flashes to signal you are programming a switch-off. Pressing it a second time saves the data and the icon stays on steady to signal activation of the Timer On function. Pressing it a third time turns off the Timer On mode.

1.5 INSTALLING AND CHANGING THE REMOTE CONTROL BATTERIES

Take off the battery cover. Insert two batteries (AAA) paying attention to their polarity. Fit the battery cover back on. Check the remote control works properly by pressing the ON button. If, on pressing the button, no icon appears on the display then you need to re-install the batteries checking their polarity.

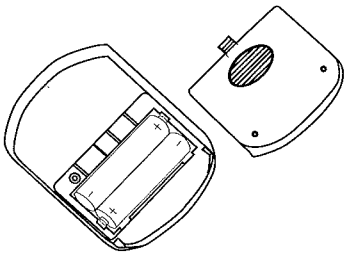

1.6 DESCRIPTION OF THE WALL PAD DISPLAY

1. Mode key (M)

(1) Press the mode key briefly to switch the thermostat mode, automatic mode, cool mode and dehumidify mode, fan mode, heat pump mode.

(2) Press and hold the mode key to enter the special mode option. There are four special modes, including Fan switch, sleep switch, Electric auxiliary heat switch, Light switch, the above four items are switch by short press after entering special mode. After turning on the sleep mode, the fan is switched on switch to low speed. In which sleep cannot be started in fan mode and dehumidify mode;

2. FAN (fan)

Press the fan key briefly to switch the fan speed, automatic, high speed, medium speed wind and low speed. The electric auxiliary heat switch can only be turned on in heating mode(refer to infrared remote control).

3.Turn on the key (POWER)

Press the switch button briefly to switch the switch state.

4. UP key (up)

Press short to increase the set temperature and increase the values of other options.

5. DOWN key (down)

Short press to reduce the set temperature and other options.

6. Child Lock Button(UP+DOWN)

Press the up key and the down key for a long time to open the child lock state. In this mode, the keys are invalid. Press and hold the up and down keys once again to cancel the child lock state.

7. WIFI connection (down button in shutdown state)

Press the down key for a long time in the off state to enter the WiFi connecting.

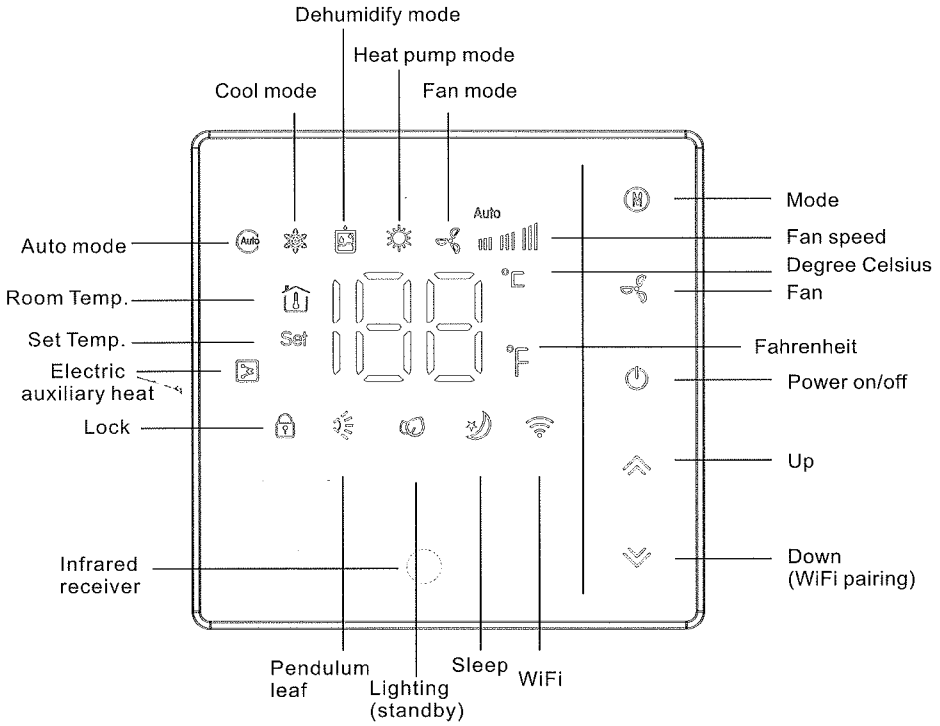

8. AUTO WIFI

WI-FI CONNECTION

Before using your Wi-Fi thermostat for the first time, you must configure the Wi-Fi signal and setting through your smartphone or tablet. This will allow communication between your connecteddevices.

Step 1 Download your APP (Fig1-1)

Fig 1-1

Fig 1-2 IOS

Fig 1-3 Android

Search for " Smartlife " in Apple Store or Google Play or use a browser to scan the QR code abov (Figure 1-2), and complete account registration and installation according to the guidance of the APP.

Step 2. Connect the thermostat

Check the tutorial below to complete the connection and setup.

Method 1: Scan the QR code to configure the network guide

(Fig 2.1-Fig 2.3)

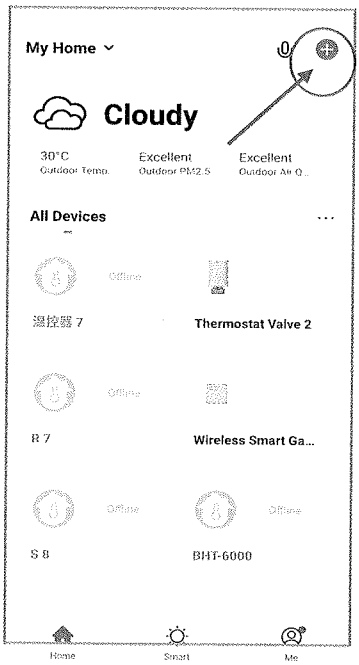

Fig 2.1

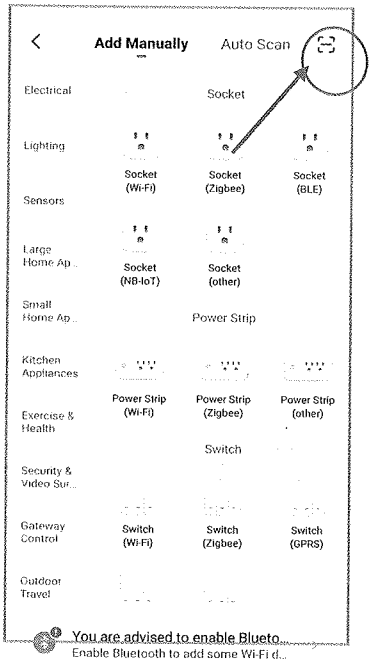

Fig 2.2

Scan this QR code

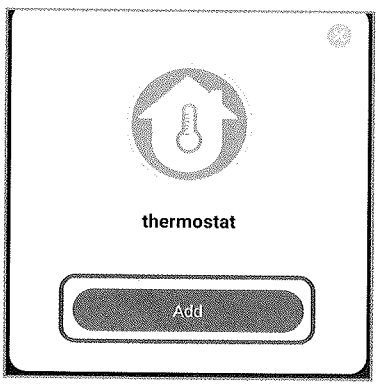

Fig 2.3

Method 2: Ordinary distribution network guidance(Fig 2.1&Fig 2.3.1)

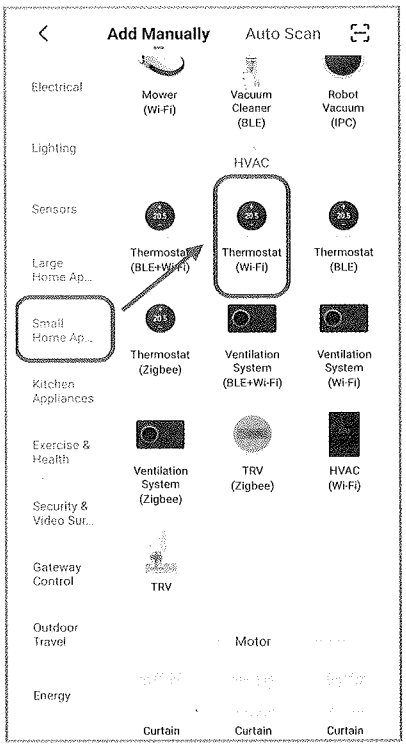

Fig 2.3.1

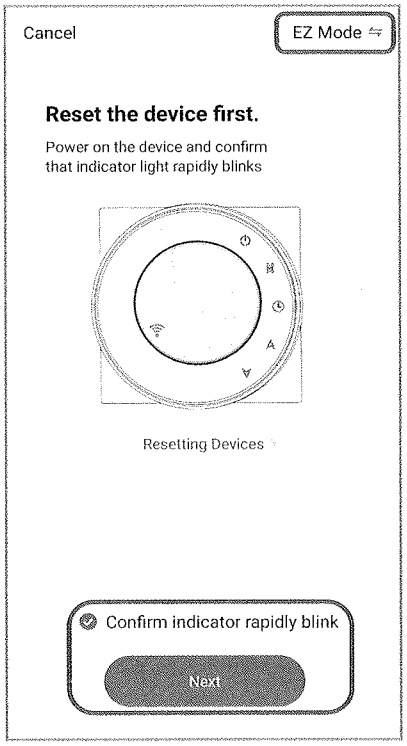

Fig 2.4

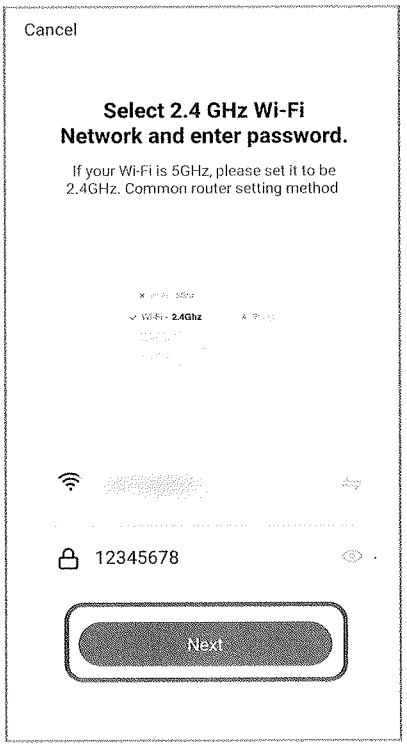

Fig 2.5

Network distribution mode:

1. EZ Mode

When the thermostat is off, press and hold the " ▽ " until the thermostat screen flashes quickly and displays the " ᯤ " icon, and then operate according to the following figure (Fig2.4-Fig 2.7)

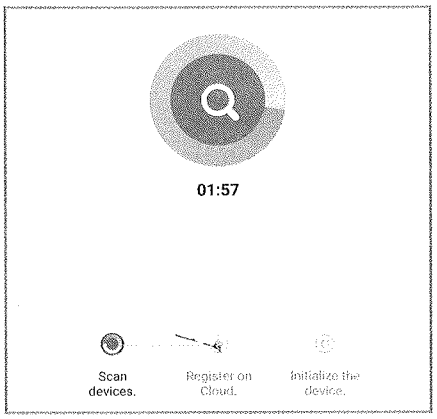

Fig 2.6

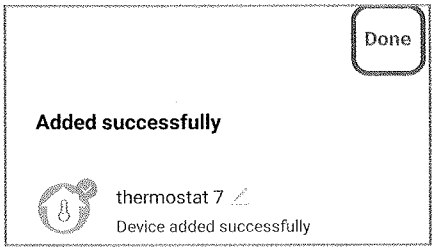

Fig 2.7

2. APP Mode

When the thermostat is off, press and hold the " ▽ " until the thermostat screen flashes slowly and the " ⊙ " icon is displayed(if the " ᯤ " icon appears, continue to press the " ▽ " until the thermostat screen Flashes slowly and displays the " ⊙ " icon),and then operate according to the following figure (Fig2.8-Fig 2.14)

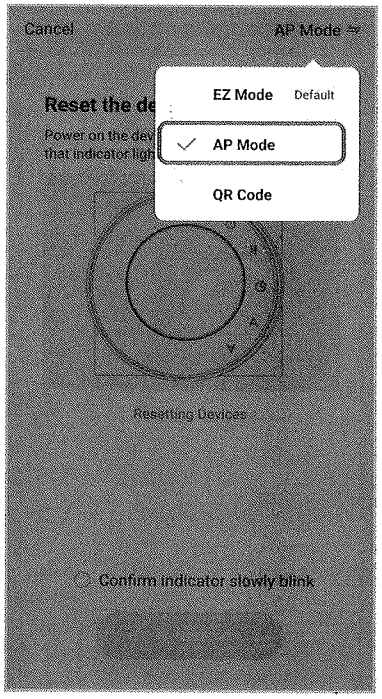

Fig 2.8

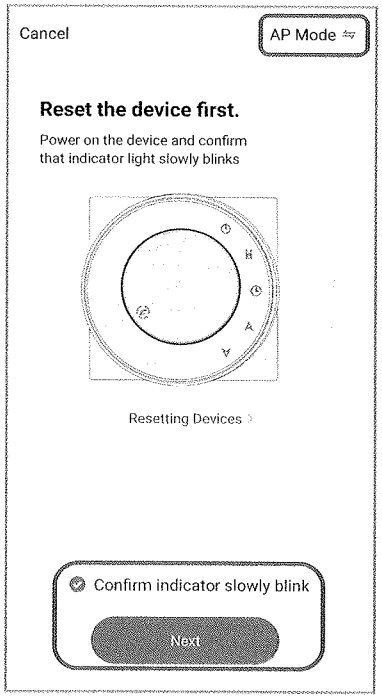

Fig 2.9

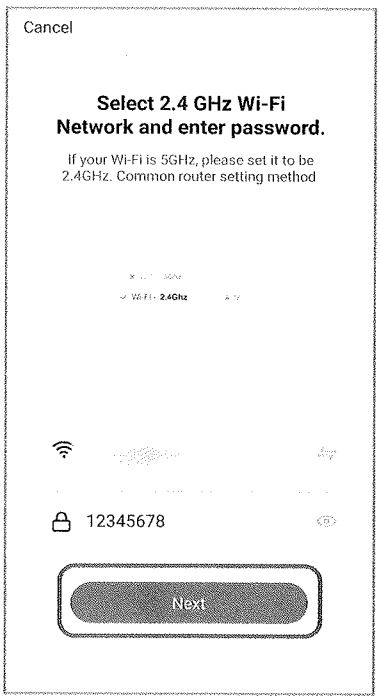

Fig 2.10

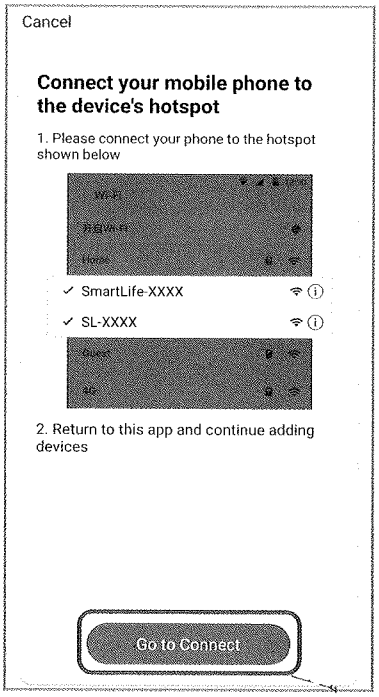

Fig 2.11

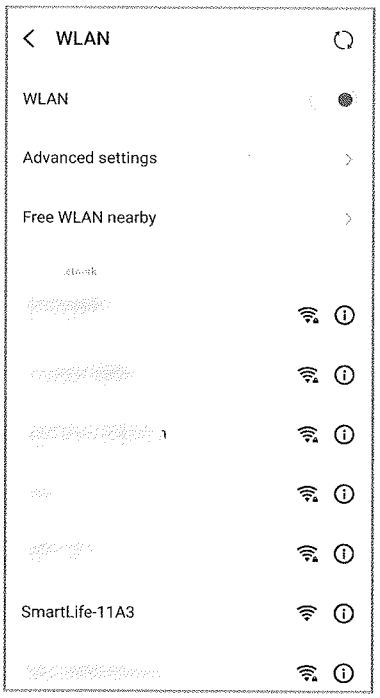

Fig 2.12

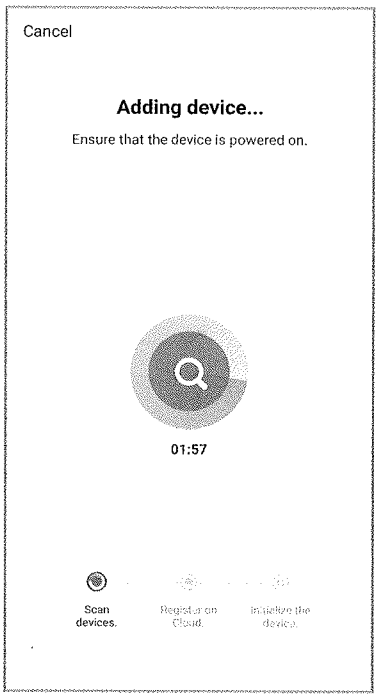

Fig 2.13

After connecting to this hotspot, return to the "smartlife" APP

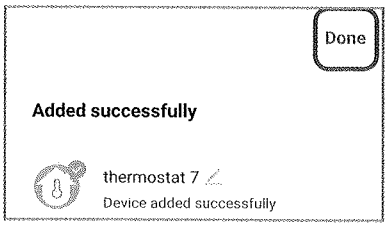

Fig 2.14

1.7 TECHNISCHE DATA

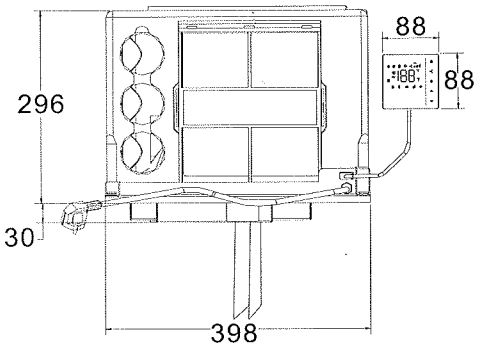

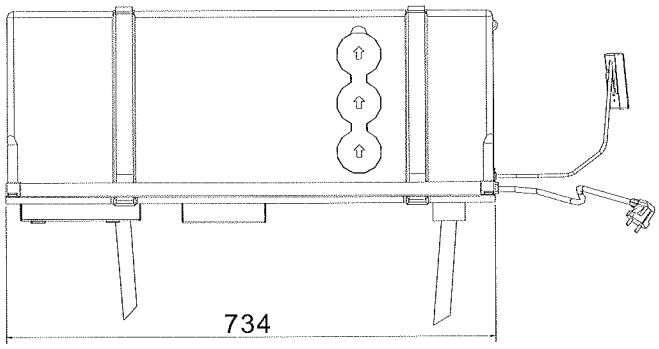

Description	Unit of measurement	Model Vechline RV Bankairco 9000BTU	
Refrigerant type/quantity	see machine dataplate		with no CFCs
Refrigerating capacity	Btu/h	9000	
Heating capacity	Btu/h	9000+500W	
Consumption when cooling	A-Watt	4.2 - 925	
Consumption when heating	A-Watt	5.3 - 1250	1250W(750W+500W)
Breakaway current	A	20 (150ms)	
Additional heating element	Watt	500	* Additional heating element
Electricity supply	V-Hz	230- 50	
Protection class	IP	X5	
Treated volume of air (max)	m^3/h	350	
Max volume (recommended with insulated walls)	m^3	30	
Weight	kg	27.8	
E.E.R.	-	2.5	
C.O.P.	-	2.6	
Ventilation	Speed no.	3	
Operating temperature	°C	from-7 to +40	** according to EN 14511

1.8 ROUTINE MAINTAINANCE

1. Periodically remove the dust with a slightly damp cloth. If necessary, use a non-aggressive detergent. Never use gasoline or solvents.

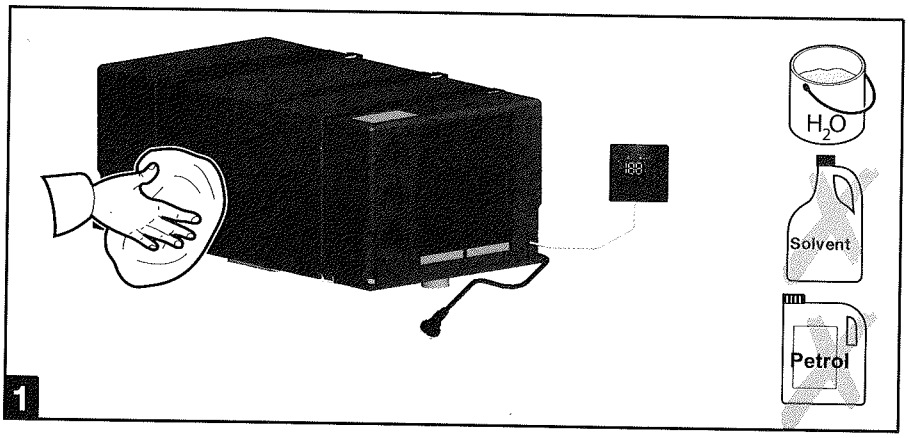

2.Periodically check that both the condensation drain openings and the openings in the floor are not blocked.

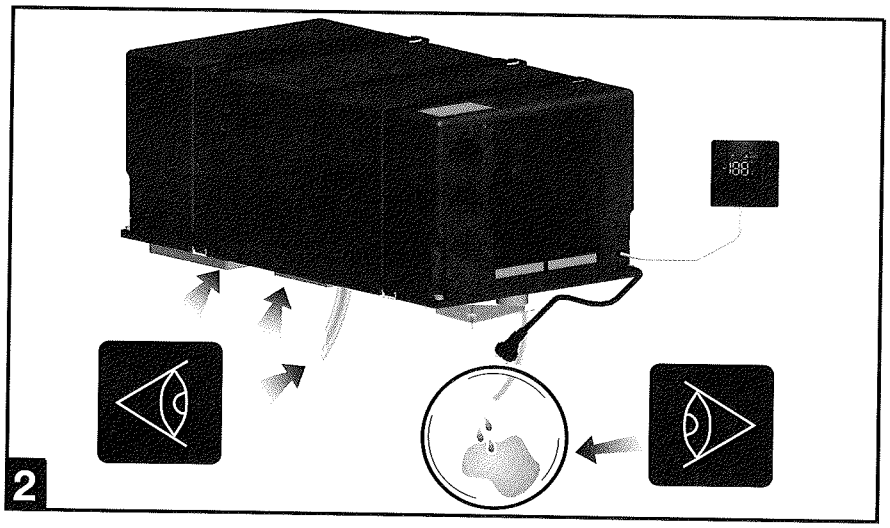

3. Filters cleaning (1). Carry this operation out periodically. Wash the filters with a detergent solution and allow to dry before refitting. Active carbon filter(2)(optional).It is recommended to change the active carbon filters every year.

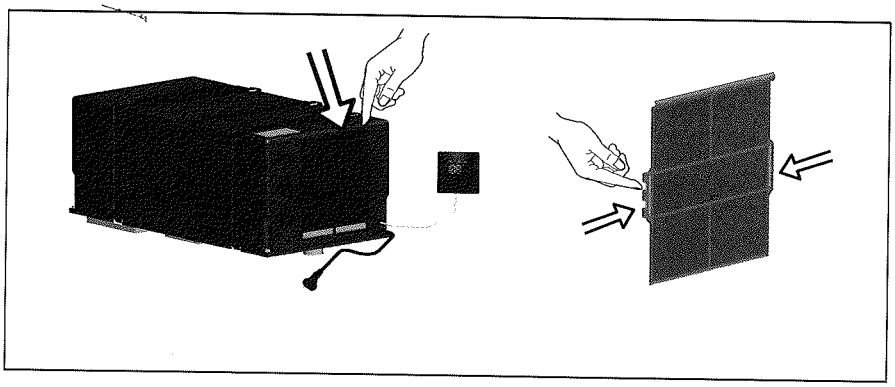

2.1 (UN) PACKING, CONTENT

Observe the instructions on the packaging. Lift the machine (with 2 persons) and check whether it is in order. Lift it using the handles or the supports on the base. Content of the package is the air conditioner, remote control, corresponding set of nozzles, hose and this manual. Keep the air conditioner in the original box when not in use.

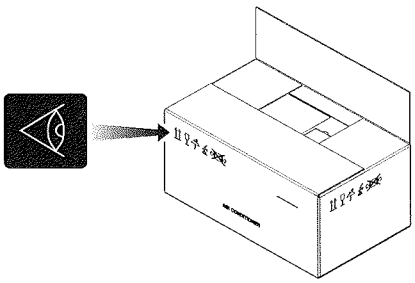

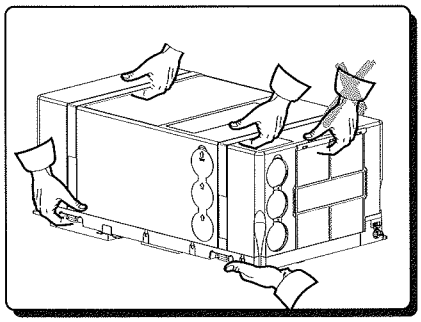

2.2 CHOICE OF THE PLACE OF INSTALLATION

To accomplish uniform climate control in a vehicle, the machine must be installed as near the middle as possible, in a housing or a similar device. Position the machine so as to ensure easy access for servicing and to facilitate disassembly and installation.

Place the assembly template in the compartment intended for installation and check the space available for the openings in the floor. To minimize the transmission of noise and vibration during operation, the machine must have a minimum clearance on each side of 30 mm from the walls and fittings. The machine must be installed on the floor.

To make renewing the filter easier, keep a distance of 200 mm between the front of the machine and the walls of the compartment.

If fitting in external compartments (e.g., false bottoms), the air to be treated must be drawn in from the vehicle's passenger compartment.

Drawing in outside air can significantly reduce the power of the system.

2.3 FIXINGSYSTEMS OF THE DEVICE

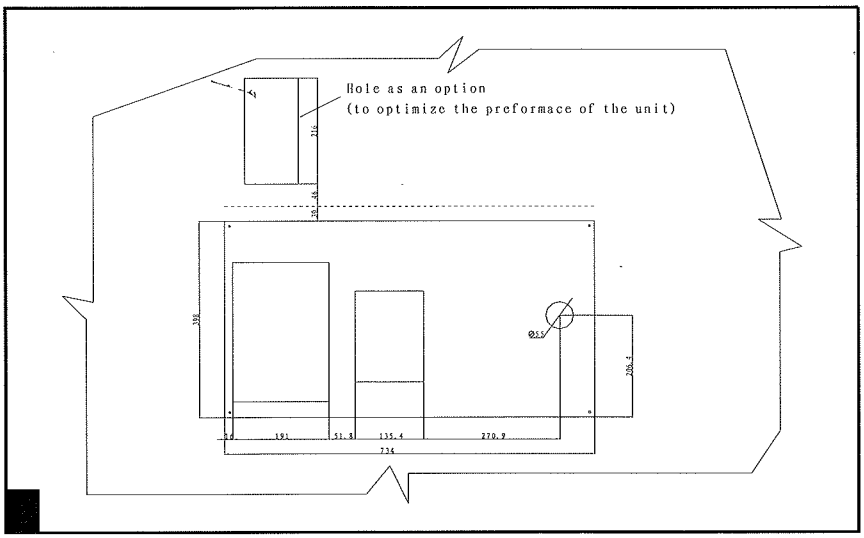

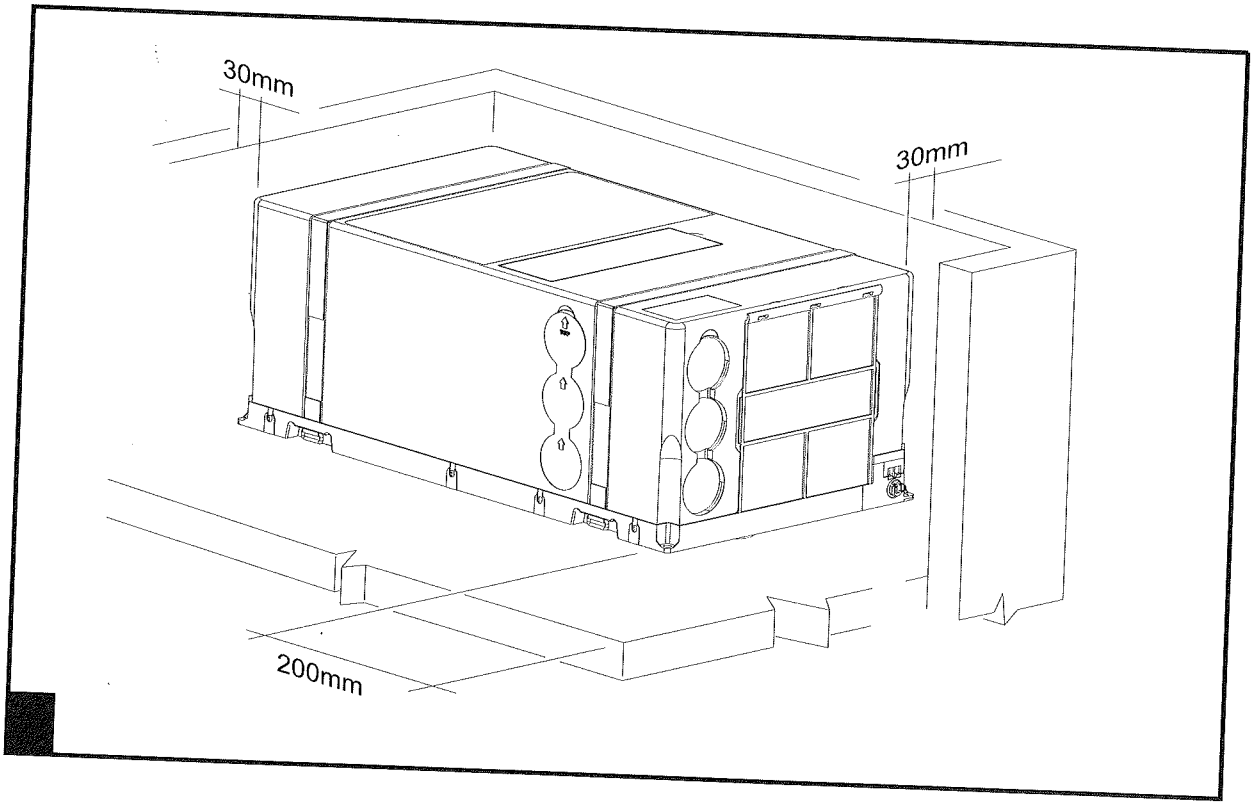
30mm
30mm
200mm

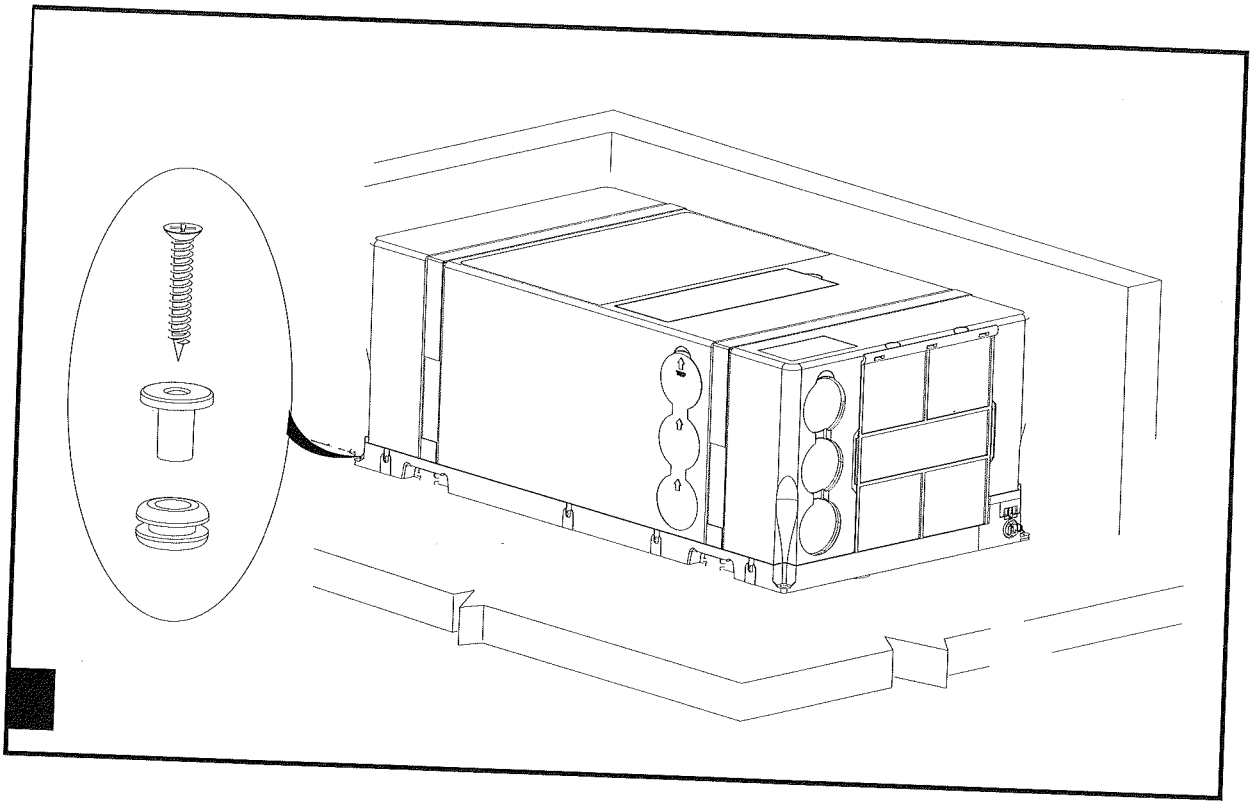

To install the machine it is necessary to create openings in the floor. The openings in the floor of the vehicle must be accessible and, there fore, must not be covered by parts of the chassis frame behind or the like. These openings must not be reached by splashes from the wheels; fit a splash guard or something similar if necessary.
Take care to leave a gap of at least 30mm between the machine and the adjacent walls. Secure the machine to the floor using the kit provided.

The machine must preferably be installed level. Maximum angle 10° to prevent condensation coming out.Before making the holes, always check there are no cables, gas pipes, parts of the chassis frame or the like underneath or hidden. Seal the machined surfaces of the openings in the floor with water-repellent products.

Fixing systems

Parts supplied for the fixing of the airconditioning.

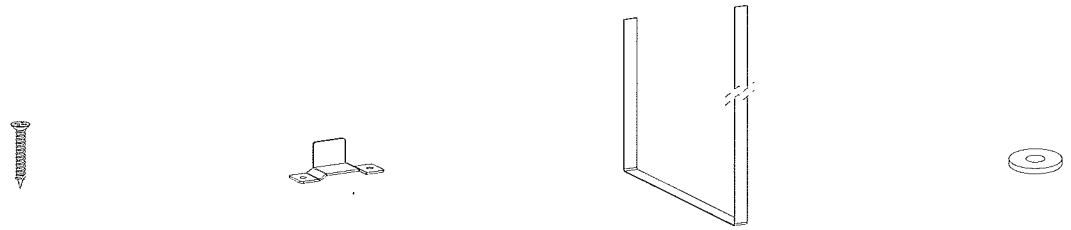

X8 x4 x2 x2

Fixing systems

Parts supplied for the fixing of the airconditioning.

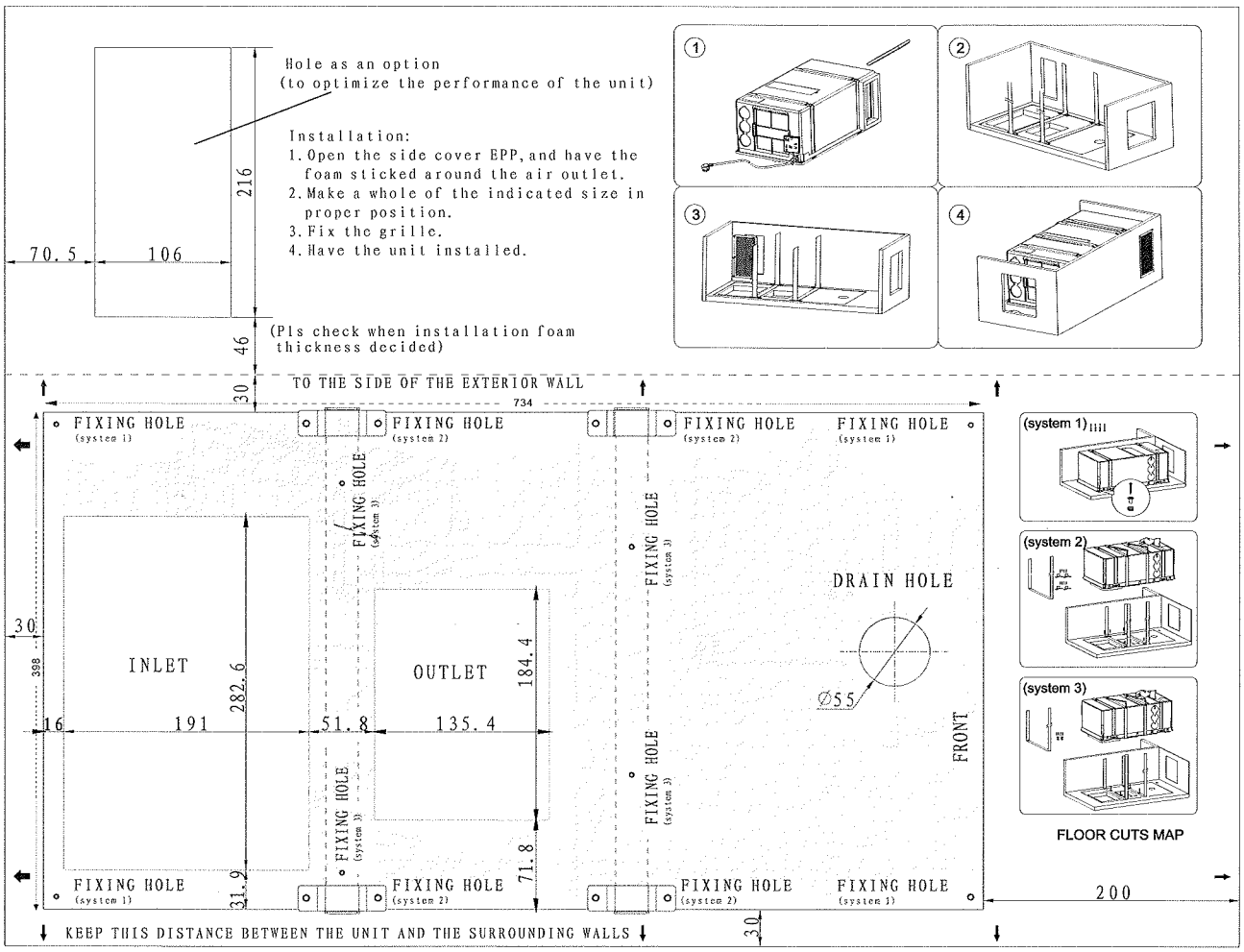

Fixing way 1. The device is fixed by screws in each of the 4 corners.

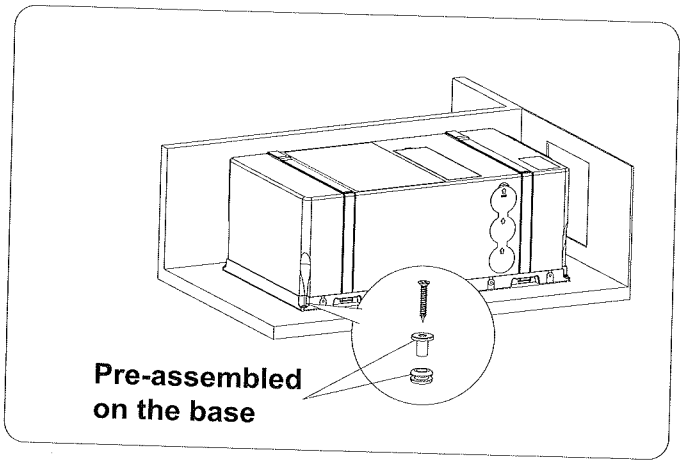

Fixing way 2. There are 4 sheetmetals which can be install on the device then fix by screws.

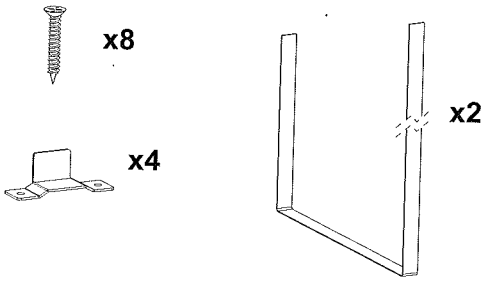

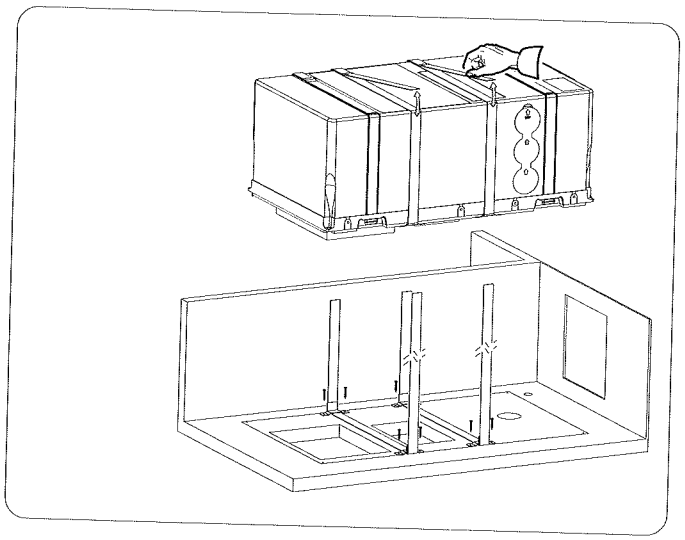

Fixing way 3. Fixed the middle 2 belts with screws then fasten the device with the belt.

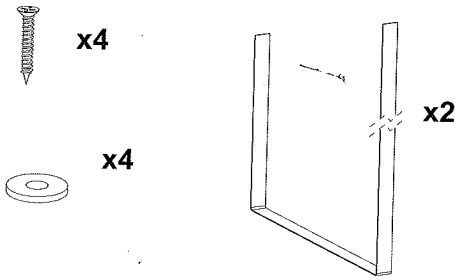

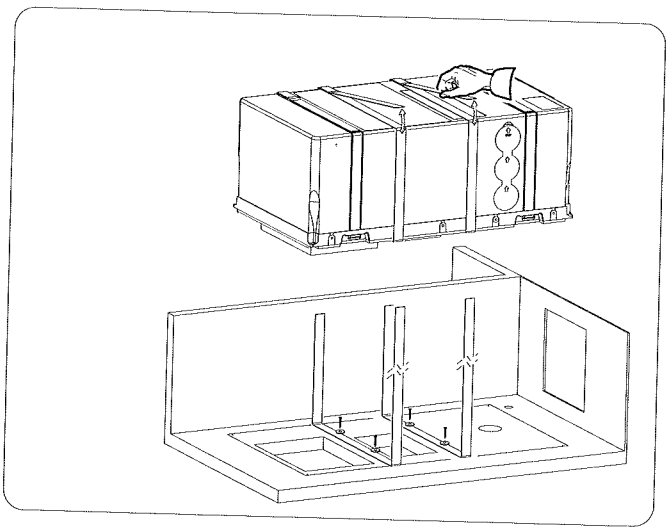

Make a hole, as an option to optimize the performance of the unit. Installation:
1. Open the side cover.
2. Make a hole in the indicated size.
3. Fix the grill.
4. Have the unit installed.

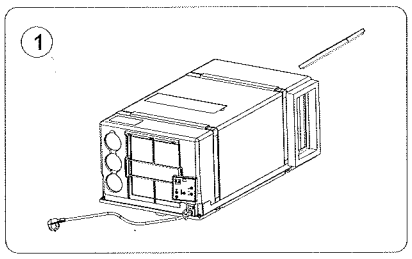

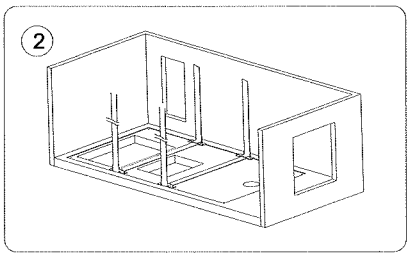

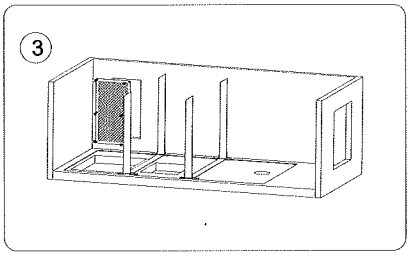

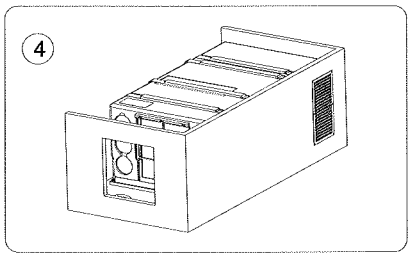

2.4 FIXING OF THE DISPLAY

Fix the steel plate on the wall with self-tapping screws. The distance between two holes is 60mm, and the hole diameter should be less than 50mm, the screw is M4*15mm pan head cross pointed tail tapping screw. After the correct wiring, place the thermostat against the steel plate, and then slide down the buckle to fix it.
The installation is complete.

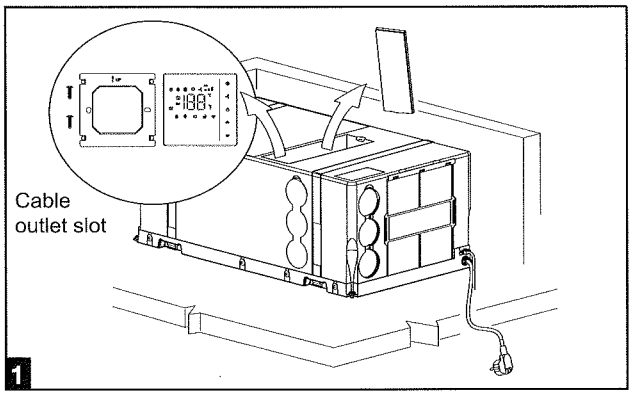

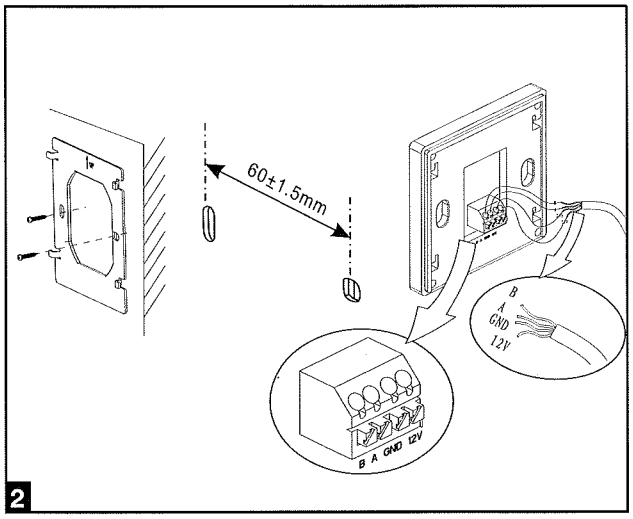

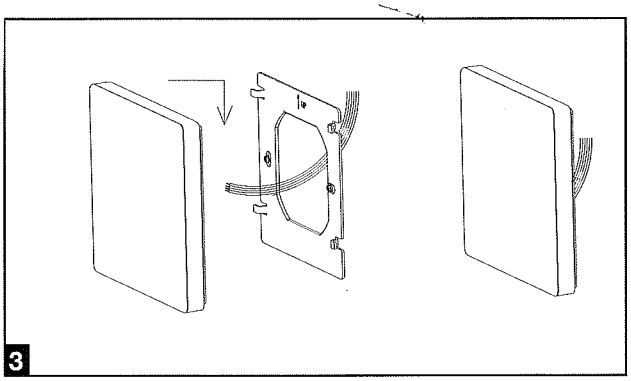

2.5 COMPARTMENT OPENING AND ELECTRICAL CONNECTION

Make a hole in the compartment where the machine has been installed to permit recirculation the internal air; Close this hole with the grille supplied that allows at least 300cm2 of air to pa through. Install the condensation drain pipes provided, connect the receiver extension to the machine and lastly power up by inserting its plug into a socket outlet 220V - 50Hz.

Before switching on, make sure that the campsite column and the extension used are able to withstand the power input required by the machine. See the technical data on the rating label a in this manual.

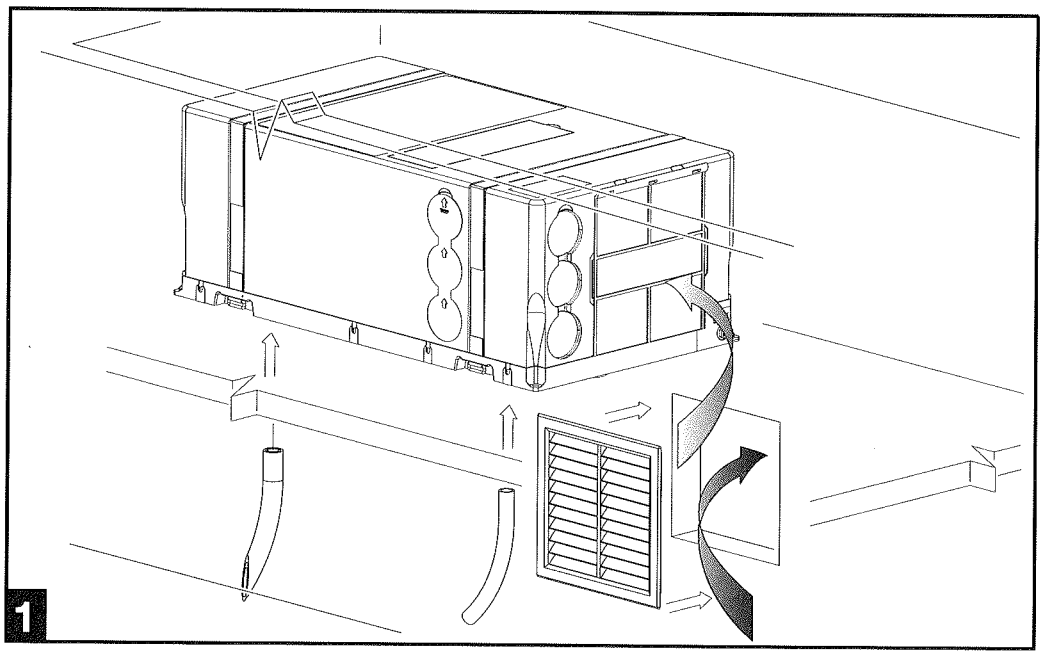

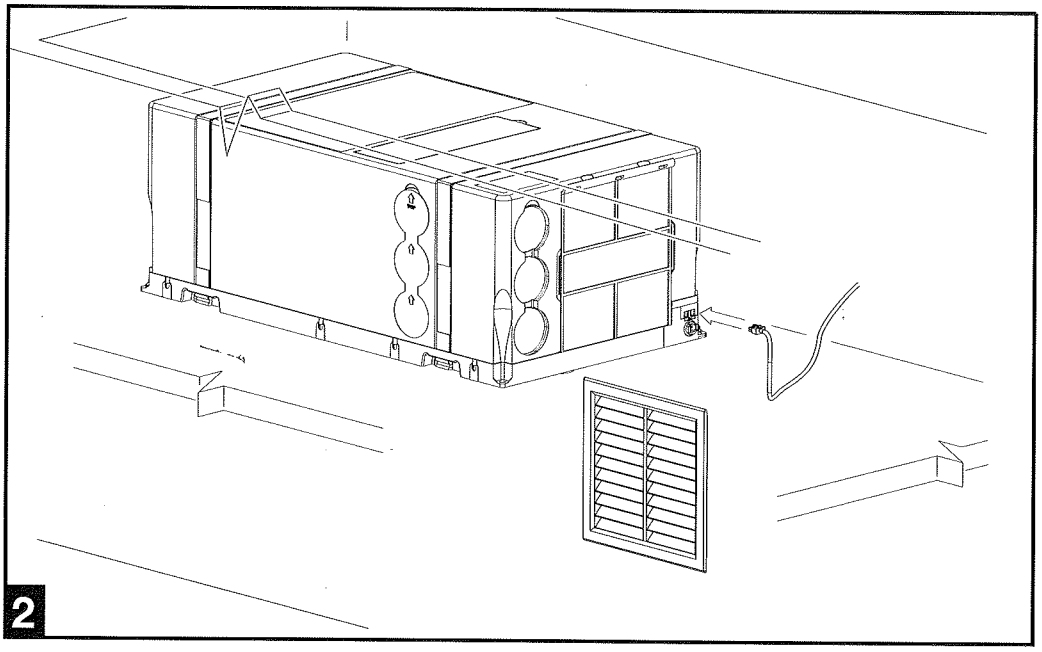

2.6 AIR DUCTING

Make the air ducting with trade parts that are not supplied. It is recommended to use cardboard pipe for air conditioning with an aluminium core and external covering of PVC with an inside nominal diameter of 60 mm. This pipe has an outside diameter of 64mm.
The ventilation pipes are joined by pressing them together thanks to the tapered hole on the air outlet.
The pipes can be connected either on the outlet on the coil side or, by removing the guard and closing the front holes, on the side outlet.

To achieve the best efficiency it is recommended to:
-lay the air pipes so they are as short and straight as possible;
-not use pipes any longer than 5m;
-not place the pipes near sources of heat.

The recirculation air is drawn in through a grille or through other openings with a total cross-section of at least 300cm2.
The recirculation air opening must be made near the machine, if this is not the case then make sure that the air flow cannot be obstructed by anything (if necessary, create an air duct between the opening and the machine).
The recirculation air must be taken from inside the passenger compartment; if it were taken from the outside then machine efficiency would suffer.

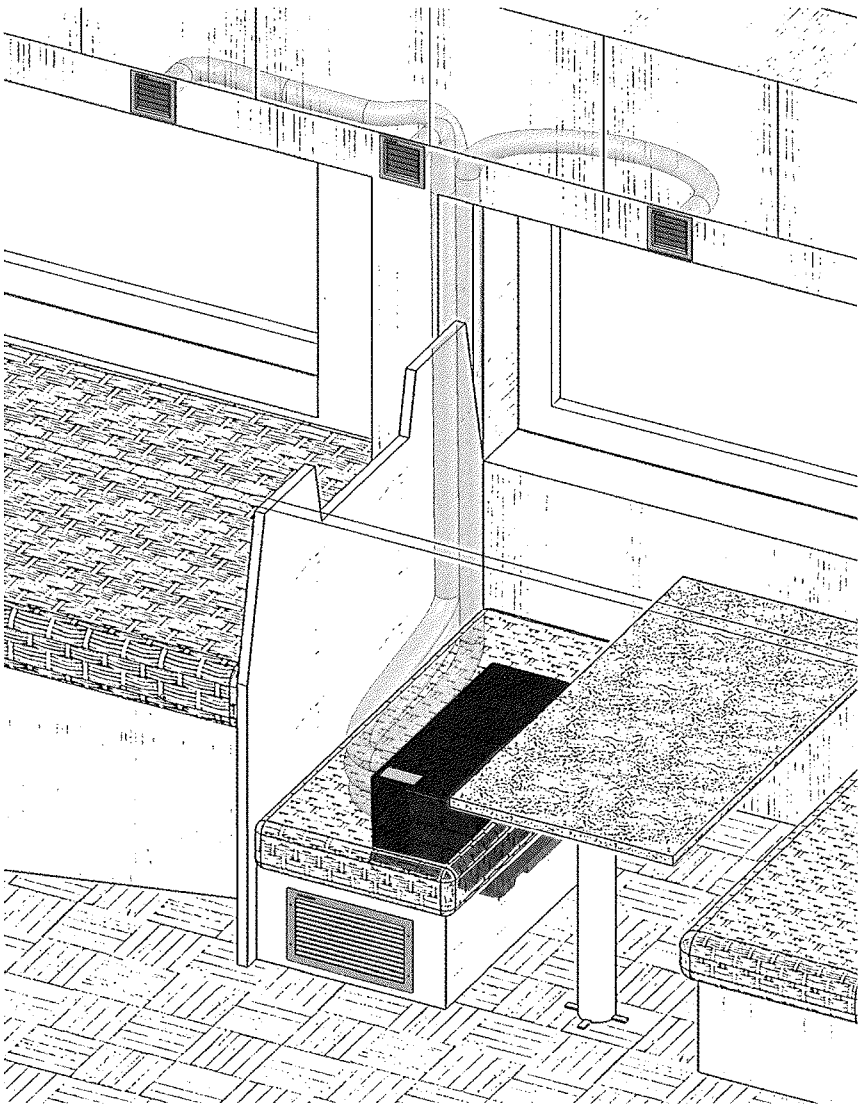

2.7 MAINTENANCE AND TROUBLESHOOTING

Operations the user can perform

Operations authorized personnel can perform

CAUSE / SOLUTION	the temperature is lower than 18°C	the temperature is higher than 30°C	check the Set Point temperature	Defective thermal protection	The Mode button is not in the right position	damaged electric heating element	low gas charge	damaged compressor	dirty heat exchange coils	defective internal fan	obstructed air filter	defective external fans	clogged condensation drain holes	damaged 4-way valve	no power arrives	voltage too low (less than 200 V)	defective electric condenser
the machine does not cool	User		User	Authorized	User		Authorized	Authorized	Authorized			Authorized					
the machine does not heat		User	User	Authorized	User	Authorized	Authorized	Authorized	Authorized					Authorized			
air no longer circulates inside the vehicle									Authorized	Authorized	User						
water seeps into the vehicle													User				
the machine will not start				Authorized				Authorized							User	Authorized	Authorized
the machine stops working				Authorized					Authorized		User	Authorized				Authorized	Authorized

It is recommended that your dealer/workshop periodically checks
1. heat exchange coils;
2. condensate drain holes.

Cleaning and keeping it clean increases the efficiency of the device.

2.8 WIRING DIAGRAM

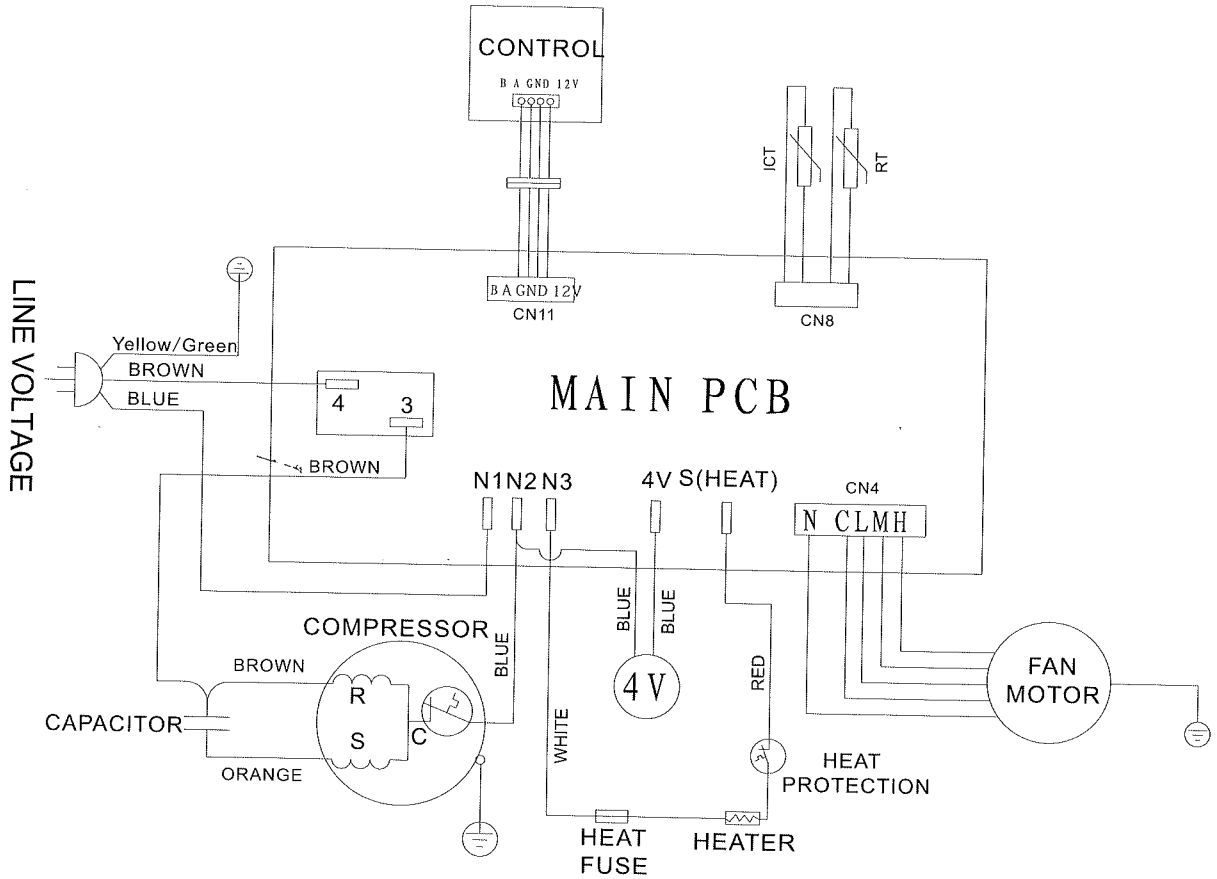

2.9 SPARE PARTS LIST

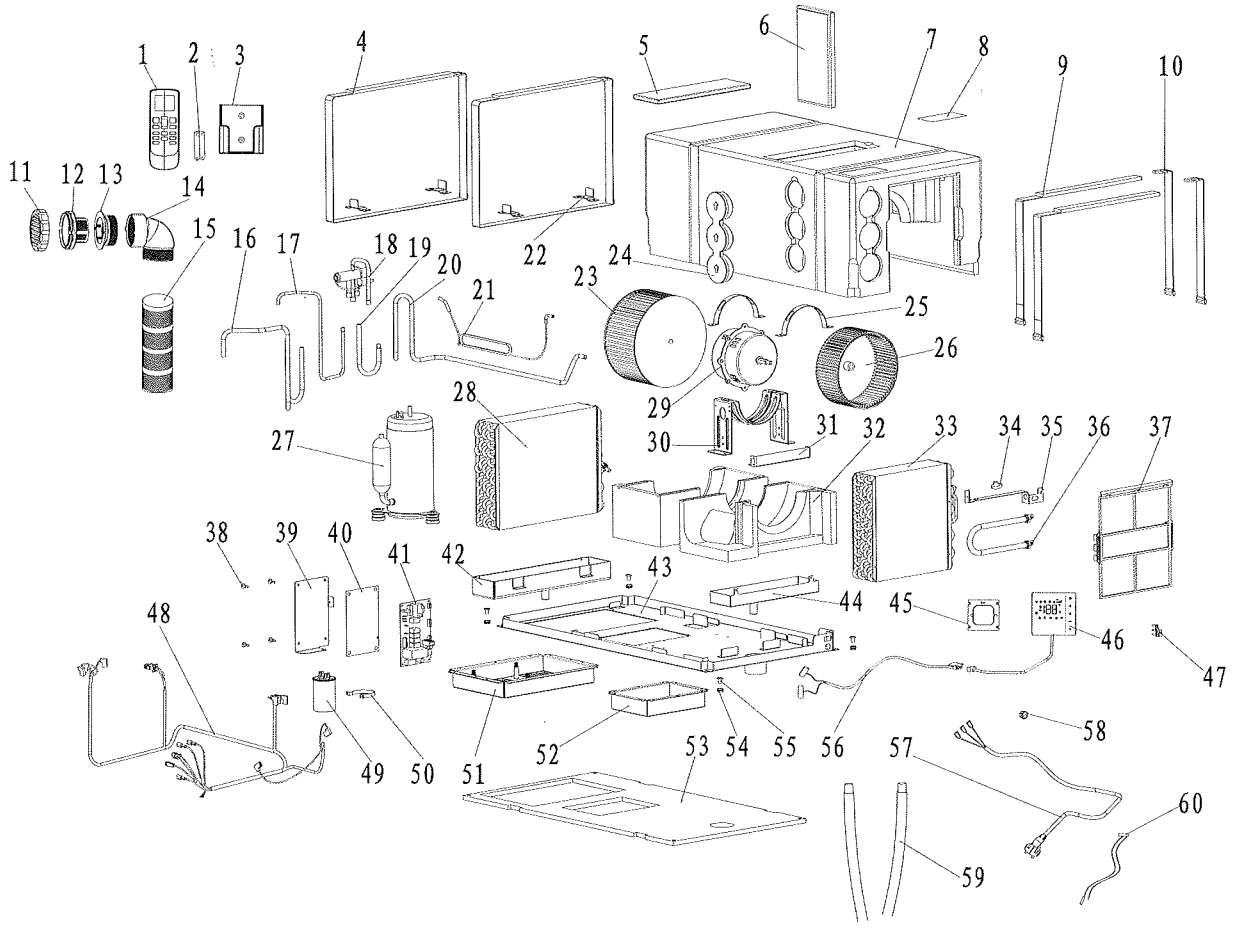

No.	DESCRIPTION	No.	DESCRIPTION	No.	DESCRIPTION
1	REMOTE CONTROL	25	MOTOR FIXING STRIP	49	COMPRESSOR CAPACITOR
2	BATTERIES(SIZE AAA)	26	EVAPORATING FAN BLOWER	50	CAPACITOR FIXATION CLAMP
3	REMOTE CONTROL SUPPORT	27	COMPRESSOR	51	COMPRESSOR FIXNG BOARD
4	FIXING BELT	28	CONDENSER	52	AIR OUTLET FIXING BOARD
5	ACCESSORIES DOOR	29	MOTOR	53	BASEPAN FOAM
6	SIDE COVER	30	MOTOR SUPPORT	54	RUBBER BRACKET
7	COVER	31	MOTOR REINFORCE	55	PLASTIC BRACKET
8	MACHINE DATAPLATE	32	BASE EPP	56	WIRE HARNESS
9	BELT	33	EVAPORATOR ASSY	57	POWER CORD
10	BELT	34	THERMOSTAT FOR HEATER	58	WIRING LOOP
11	GRILLE	35	THERMOSTAT BRACKET FOR HEATER	59	DRAIN PIPE
12	GRILLE SUPPORT	36	HEATING STRIP	60	Room temperature Sensor
13	BUSH	37	FILTER		
14	90° CURVE	38	SPACER FOR PCB		
15	AIR PIPE	39	PCB FIXING BOARD		
16	SUCTION PIPE	40	PCB BACKPLATE		
17	DISCHARGE PIPE	41	PCB		
18	4-WAY VALVE	42	DRAIN PAN FOR COND		
19	HIGH PRESSURE PIPE	43	BASE PAN		
20	LOW PRESSURE PIPE	44	DRAIN PAN FOR EVAP		
21	CAPILLARY ASSY	45	WALL PAD SEAT		
22	BUCKLE	46	WALL PAD CONTROLLER		
23	CONDENSER FAN	47	SENSOR BRACKET		
24	AIR OUTLET PLUG	48	MAIN CORD		

CORRECT DISPOSAL OF THIS PRODUCT

This marking indicates that this product should not be disposed with other household waste throughout the EU, it should not be put in the domestic garbage. To prevent possible harm to environment or human health from uncontrolled waste disposal, recycle it responsibly to pr the sustainable re-use of material resources. To return your used device, please use the retur collection systems or contact the retailer where the product was purchased. They can take th product for environmental safe recycling.

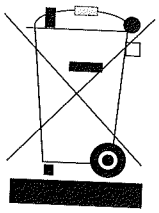

OCS-Recreatie Groothandel B.V.
Amarilstraat 40
7554 TV Hengelo
Nederland
www.ocs-recreatie.nl